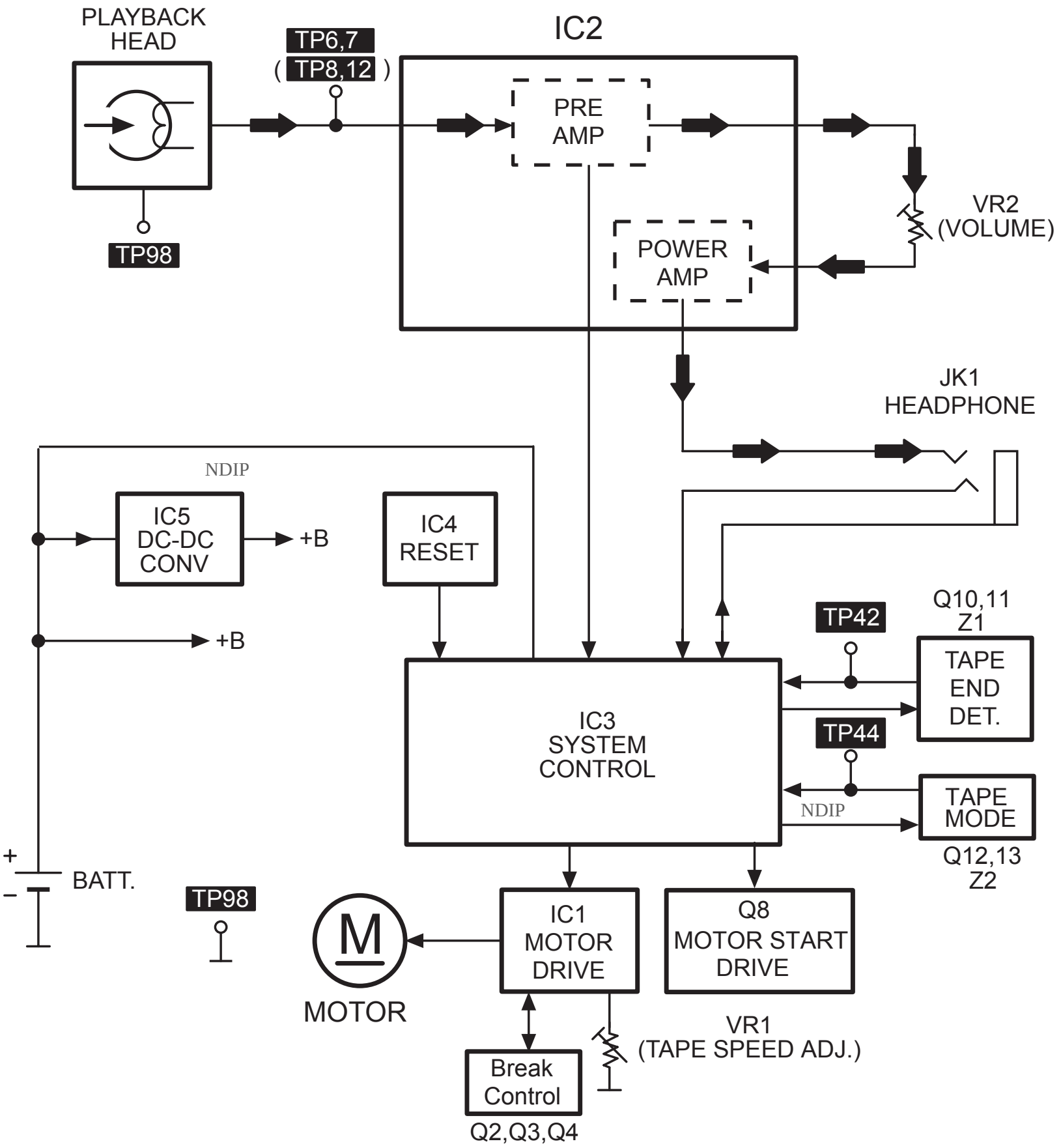

Notes
- ( ):Indicates pin No. Right channel.
- ➡ :Playback signal line.

RQ-SX56EG Block Diageram

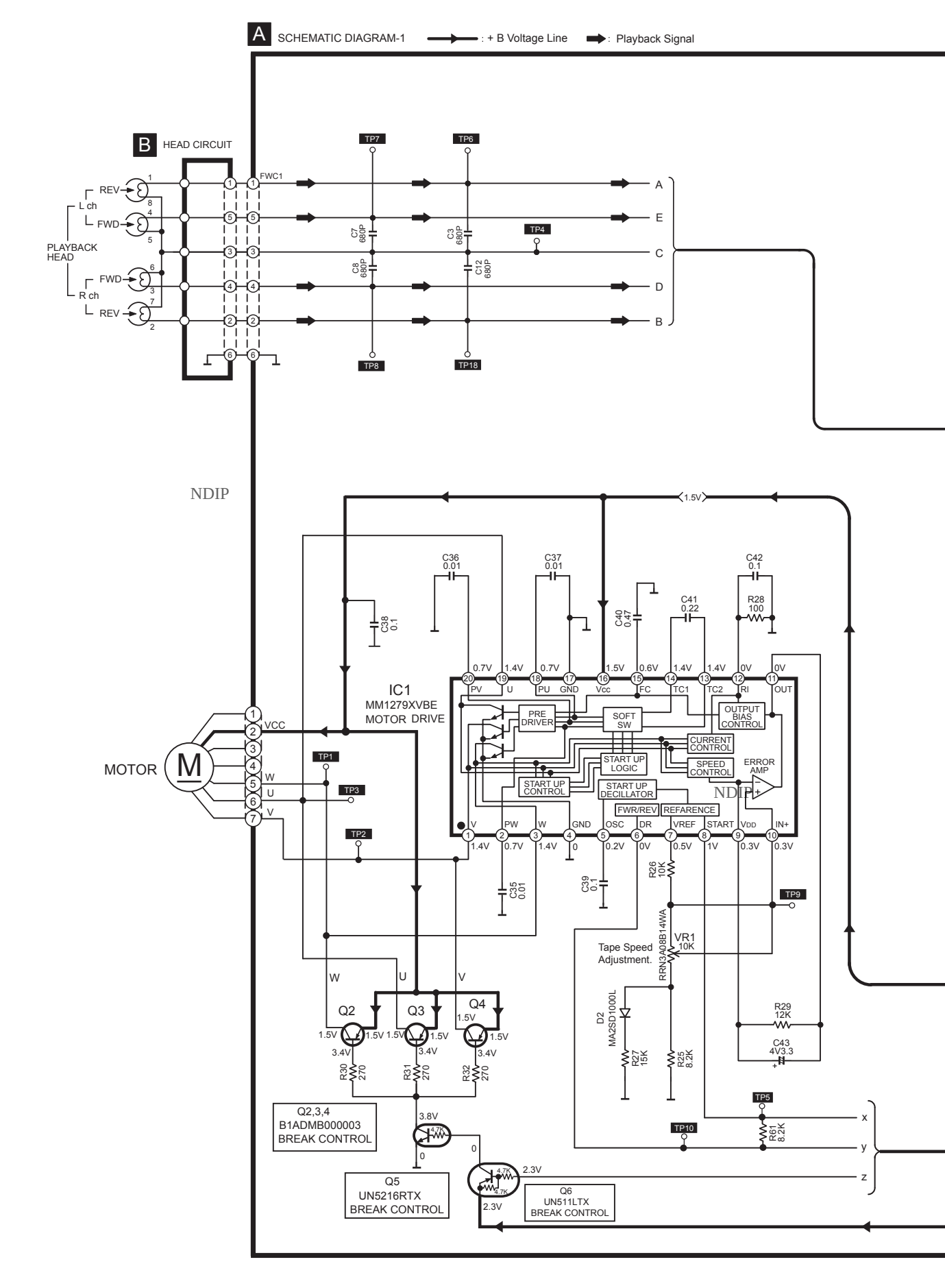
A SCHEMATIC DIAGRAM-1
: + B Voltage Line
: Playback Signal
B HEAD CIRCUIT
PLAYBACK HEAD
L ch
R ch
REV
FWD
FWC1
TP7
TP6
TP4
TP8
TP18
C7 680P
C8 680P
C3 680P
C12 680P
A
E
C
D
B
NDIP
1.5V
C36 0.01
C37 0.01
C42 0.1
C41 0.22
R28 100
C40 0.47
C38 0.1
IC1
MM1279XVBE
MOTOR DRIVE
PV
U
PU
GND
Vcc
FC
TC1
TC2
RI
OUT
PRE DRIVER
SOFT SW
OUTPUT BIAS CONTROL
CURRENT CONTROL
START UP LOGIC
SPEED CONTROL
ERROR AMP
START UP CONTROL
START UP DECILLATOR
FWR/REV
REFARENCE
V
PW
W
GND
OSC
DR
VREF
START
VDD
IN+
MOTOR
M
VCC
W
U
V
TP1
TP3
TP2
C35 0.01
C39 0.1
R26 10K
TP9
RRN3A08B14WA
VR1 10K
Tape Speed Adjustment.
D2 MA2SD1000L
R27 15K
R25 8.2K
R29 12K
C43 4V3.3
Q2
Q3
Q4
R30 270
R31 270
R32 270
Q2,3,4
B1ADMB000003
BREAK CONTROL
3.8V
4.7K
Q5
UN5216RTX
BREAK CONTROL
2.3V
Q6
UN511LTX
BREAK CONTROL
TP5
TP10
R61 8.2K
x
y
z

A SCHEMATIC DIAGRAM-2 : + B Voltage Line : Playback Signal

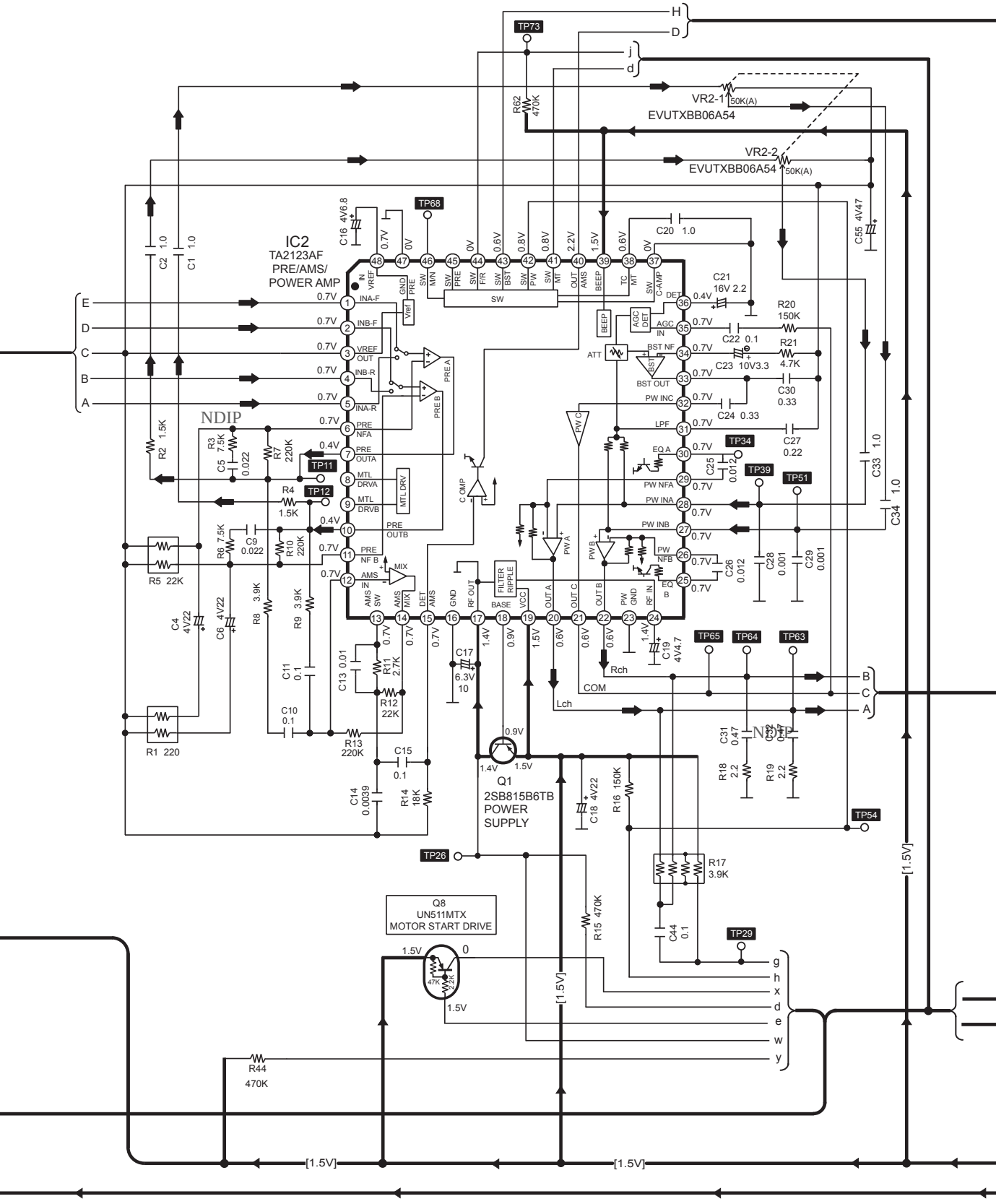
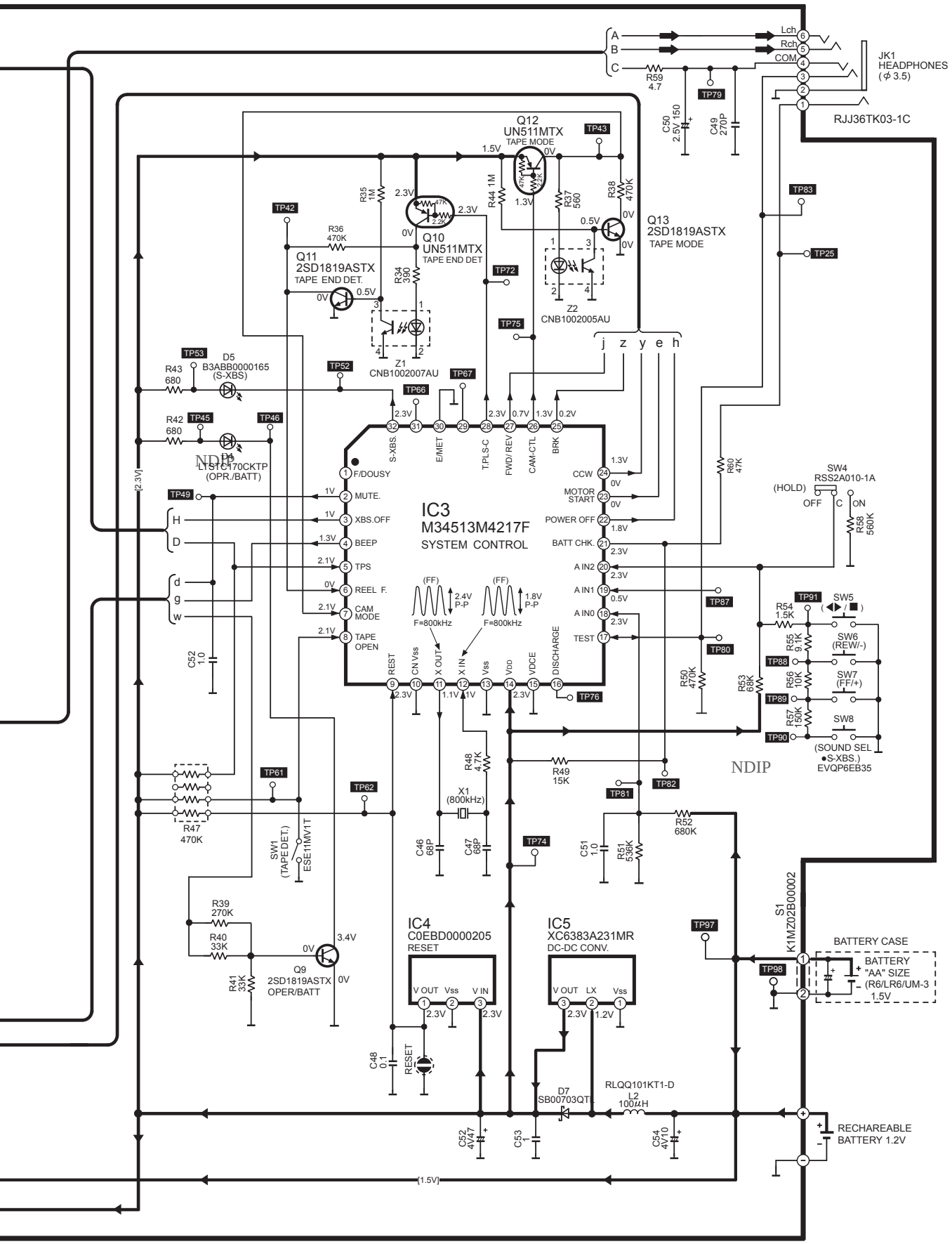
A SCHEMATIC DIAGRAM-3 : + B Voltage Line : Playback Signal